CE Certificate N° E-02.02.C06

OIML R60/2000-ES1-09.01

Beslo لودسل لودتک

ساخت اسپانیا

Capacity

10 – 15 – 20 - 25 – 30 – 35 – 40 - 50 t

Compression load cell

Up to 6000 divisions OIML-R60

Fully stainless steel

Fully welded. Protected against humidity IP-69K (DIN40050-9)

With gas dischargeers to protect against atmospheric discharges

Technical Data

Accuracy class	C3-C4-C5-C6
Rated output	2 ± 0.05% mV/V
Vmin	Emax/18000
Excitation Voltage	5÷15 V
Input Resistance	800 ± 3
Output resistance	700 ± 3
Temperature Compensation	-10° C / +40° C
Temperature limits	-30° C / +70° C
Insulation resistance	> 5000 M Ω

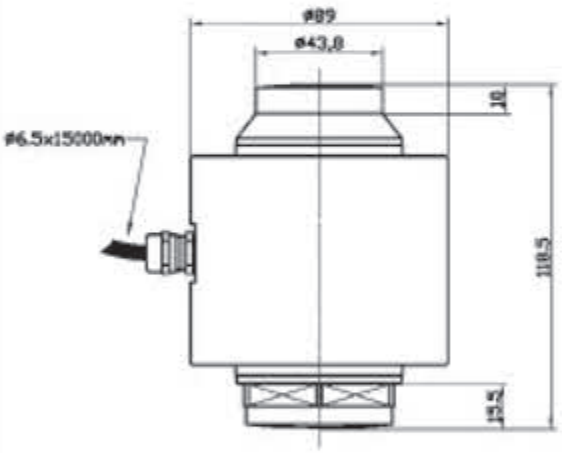

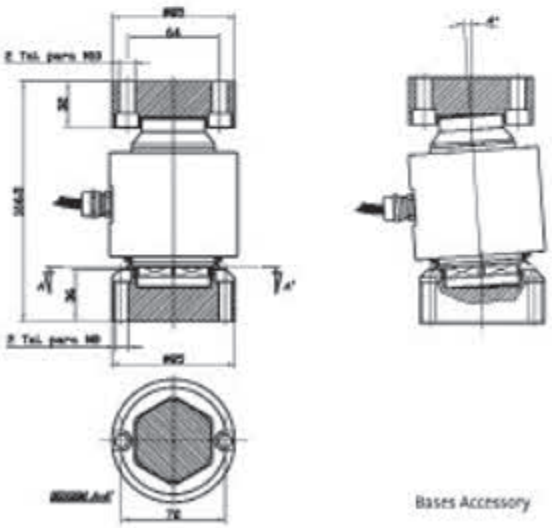

Bases Accessory

Connections
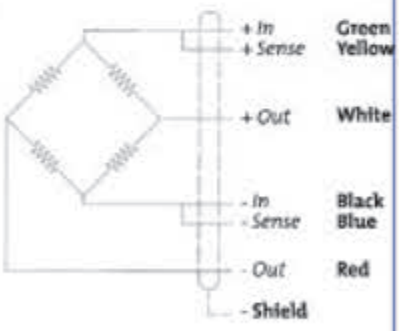
Optional Sense